HEBI ROBOTICS

Accelerating the future of robotics.

Roboter: Sensornetzwerke & Motion Control

IoT-Talks: “IoT in Motion”

Feb, 2020

Outline

- Sensor Networks & System Architecture
- Intro to Robotics & Motion Control

Background

Modular Robotic Building Blocks

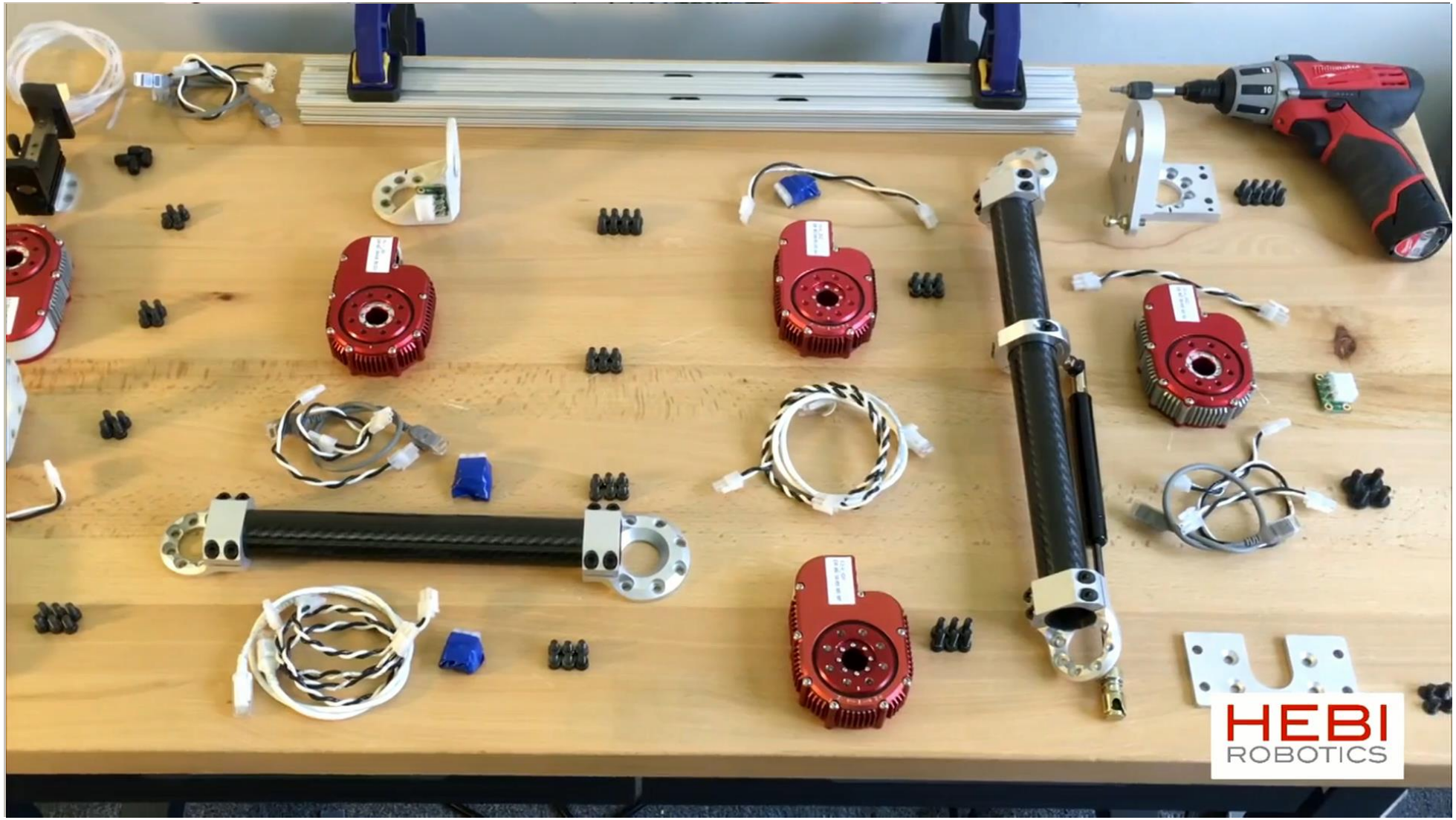

https://youtu.be/zeia5MID_MU

Caltech: ME-134 Autonomy

https://youtu.be/rfH-egh09io

Some Research Applications

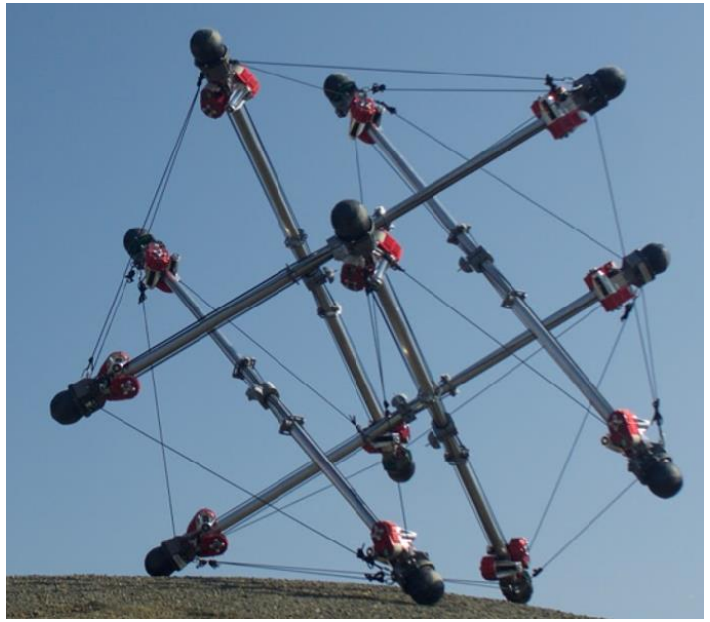

System Architecture

Sensor/Actor Network

Robot

- Actuators
- IMU
- HMI
- Control Unit
- Analog Inputs
- Digital I/O
- Laser Scanner
- Camera
- etc…

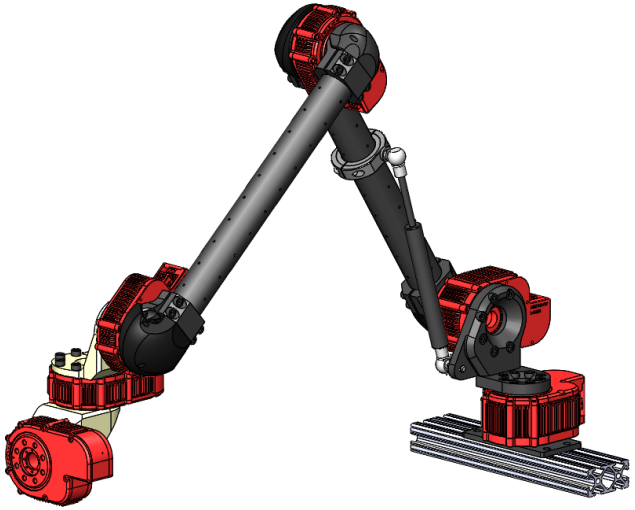

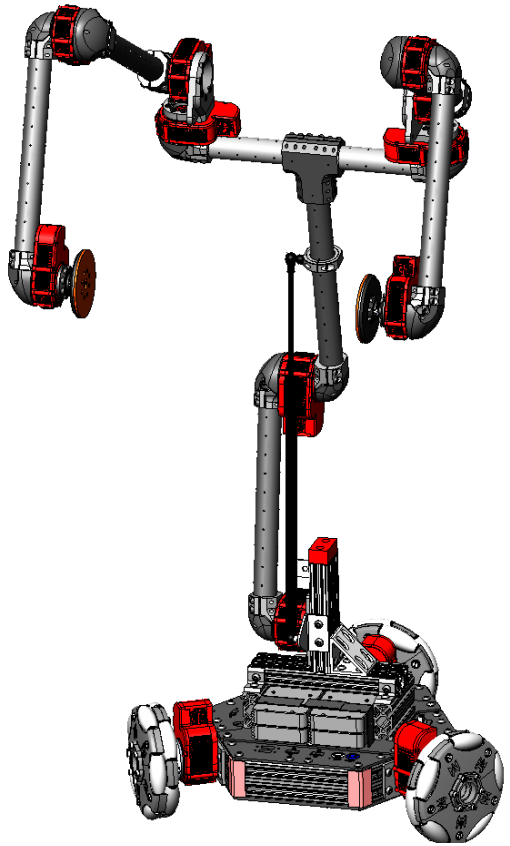

Robot Communication Standards

Requirements

- Plug & Play
- COTS Hardware
- Cross Platform (OS/Arch/Lang)
- ~2 Mbps / Device

Communications

Ethernet

- 100 Mbps Ethernet
- DHCP or Static IPs

Traffic / Protocol

- Soft Real-Time
- Timestamps everywhere
- Multiple passive listeners (e.g. debug UI)
- Network is controlled by user

Real-Time Control

Soft Real-Time

- High-Level Behavior
- Full-Body Coordination

max jitter in **ms - s**

Hard Real-Time

- Device drivers
- Motor control
- Safety features
- PID Controllers

max jitter in **ns - us**

Typical Control Architecture

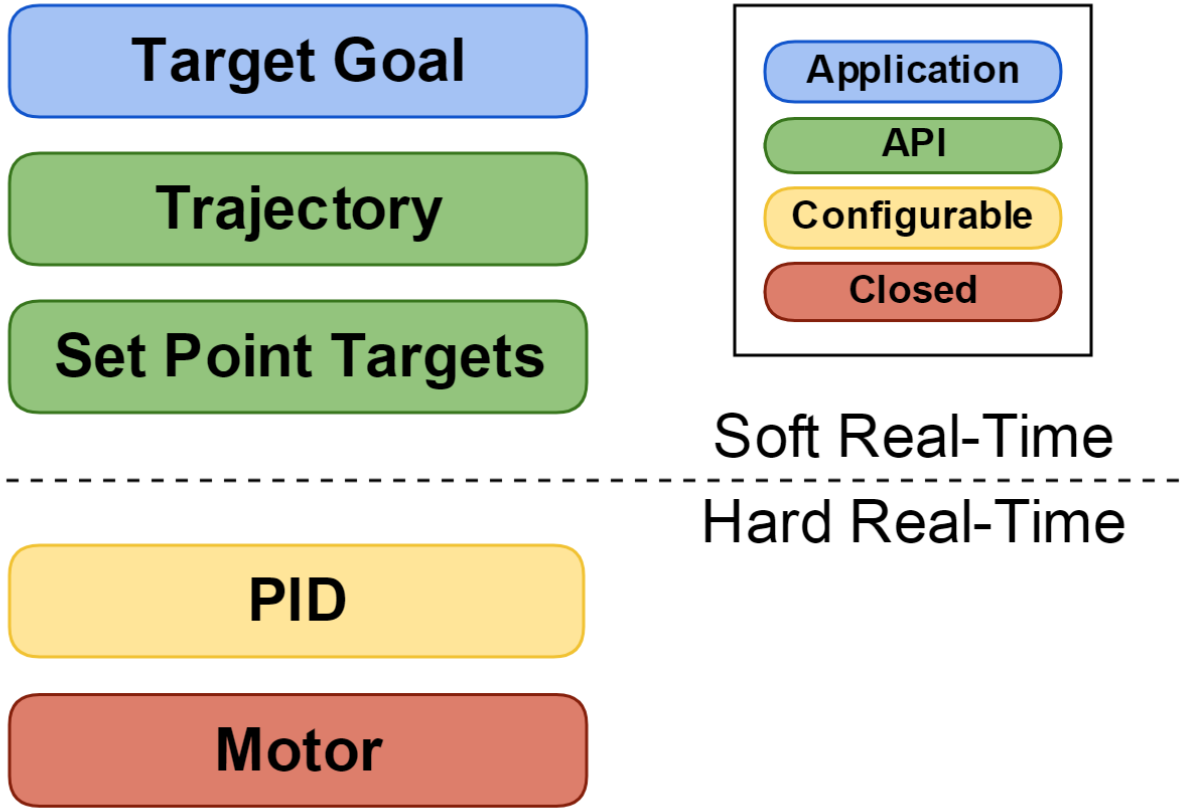

Demo

Control Strategy: 4

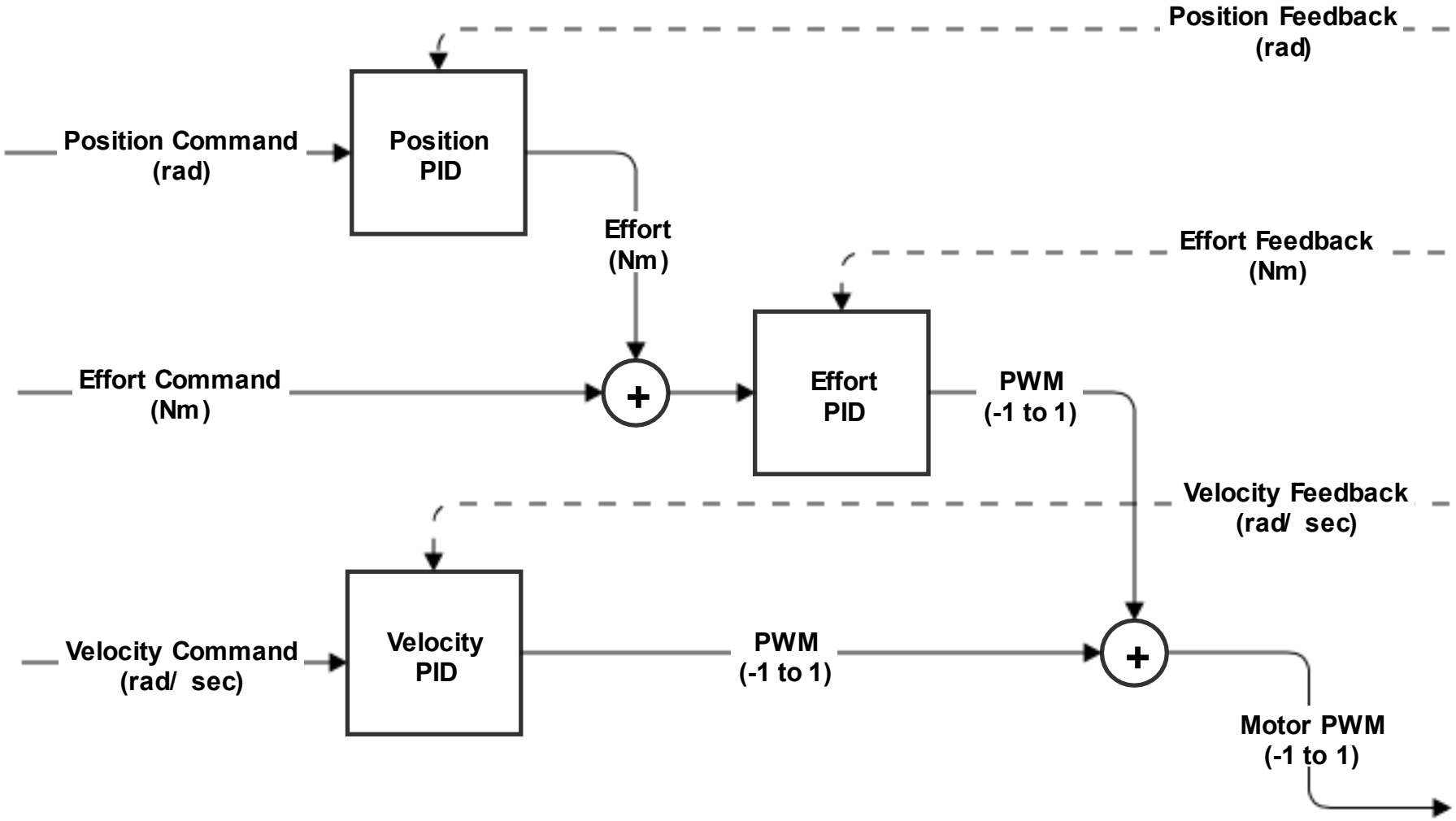

Intro to Robotics & Motion Control

Core Topics

- Forward Kinematics
- Jacobians
- Impedance Control
- Trajectories
- Inverse Kinematic

Kinematics & Jacobians

Forward Kinematics

- joint angles -> xyz

Jacobians

- joint velocities -> xyz velocities
- joint torques -> xyz forces

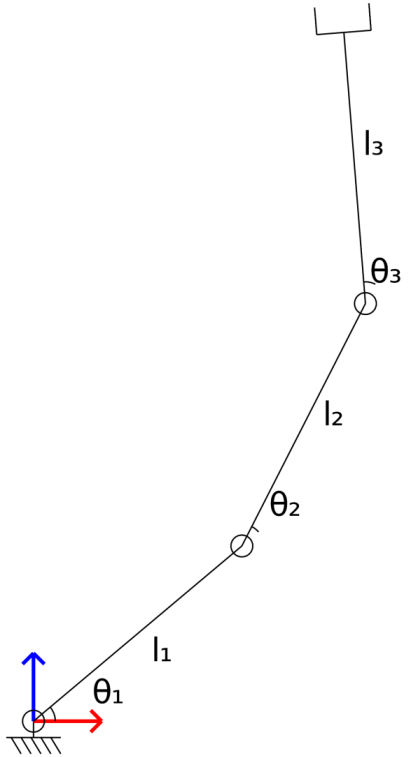

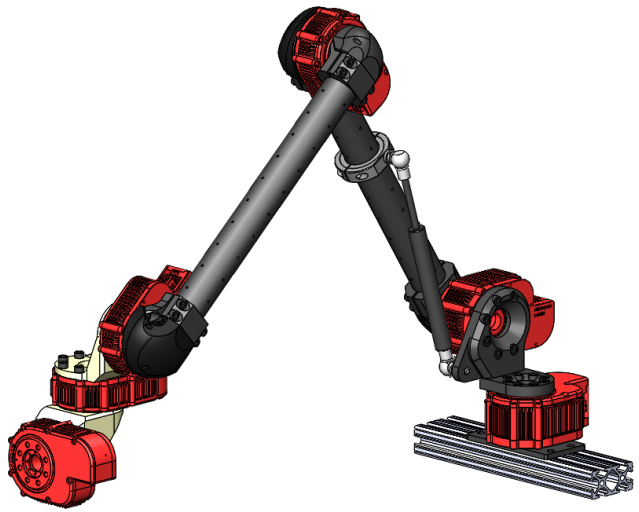

Demo

Smooth Trajectories are important!

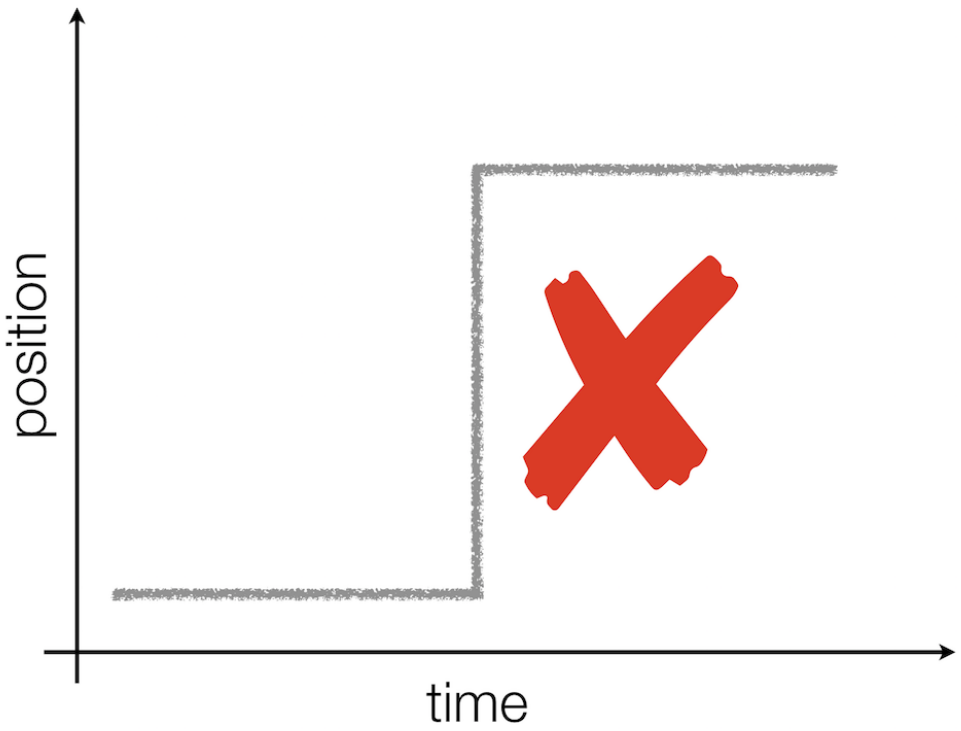

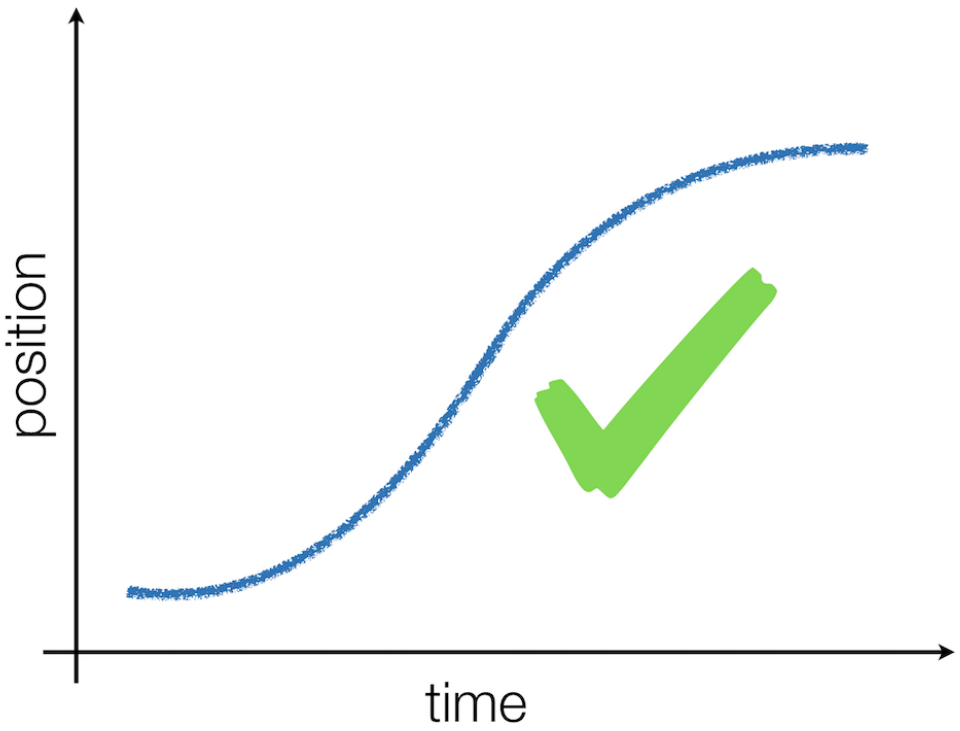

Trajectories

- **Bang-bang**

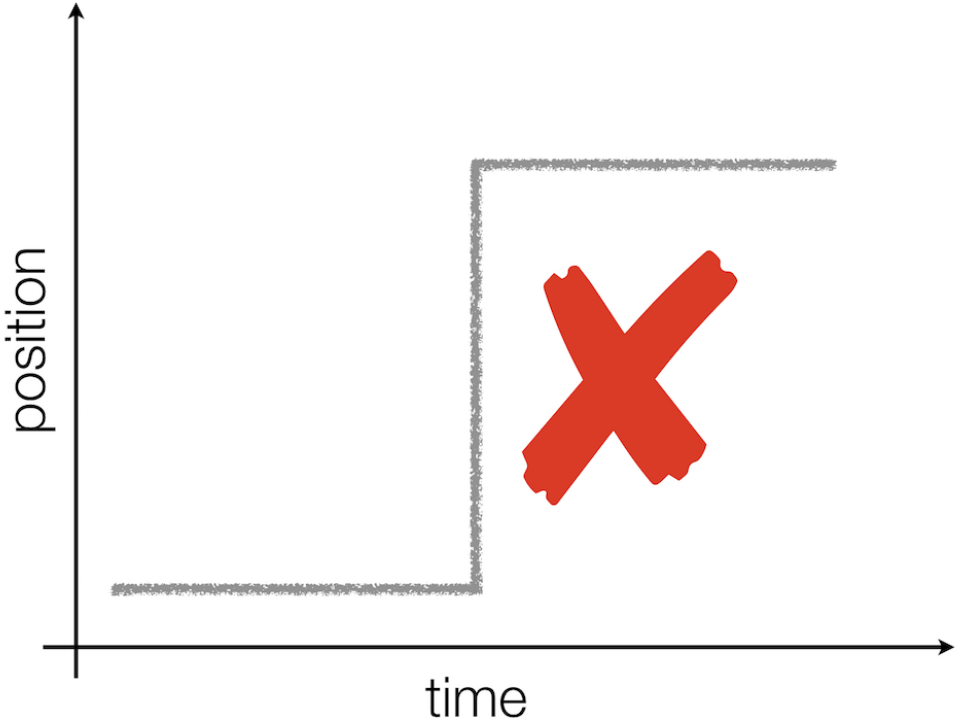

Trajectories

- Bang-bang
- **Constant Velocity**

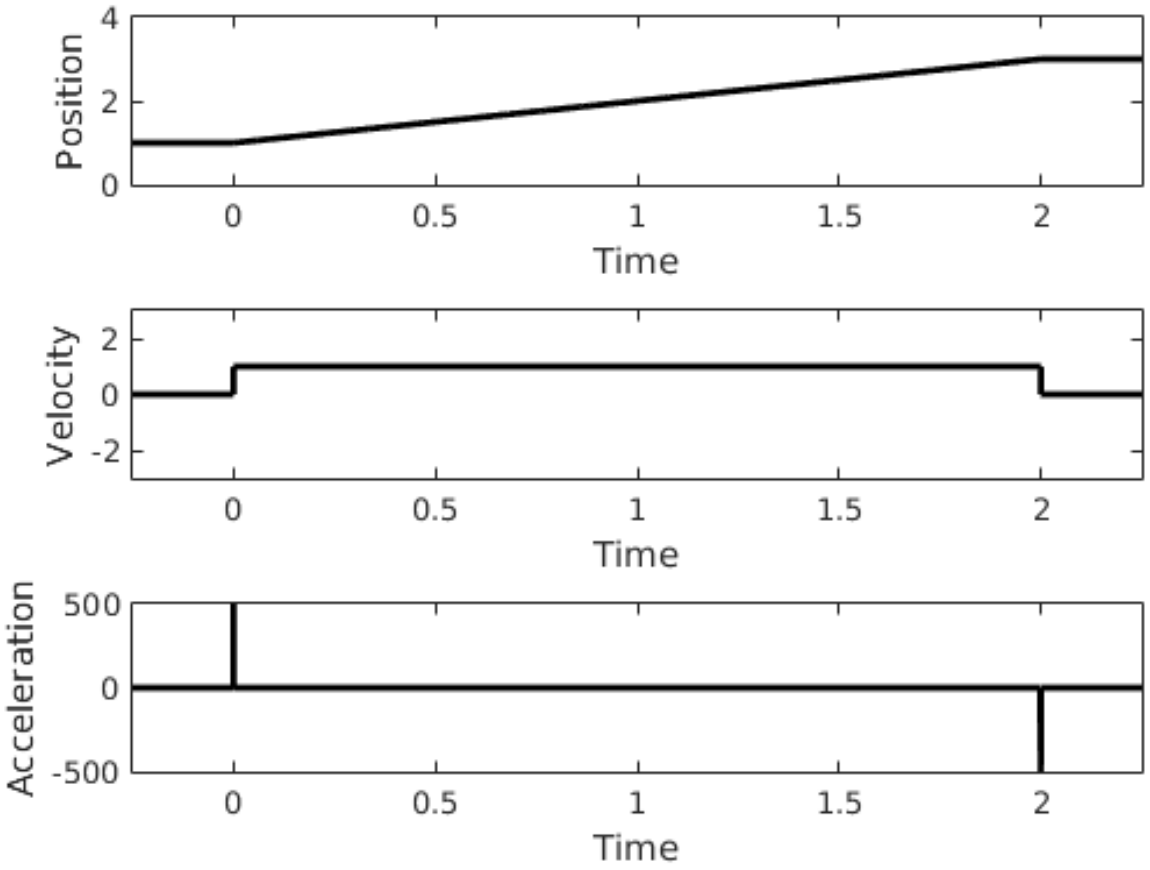

Trajectories

- Bang-bang
- Constant Velocity
- **Trapezoidal**

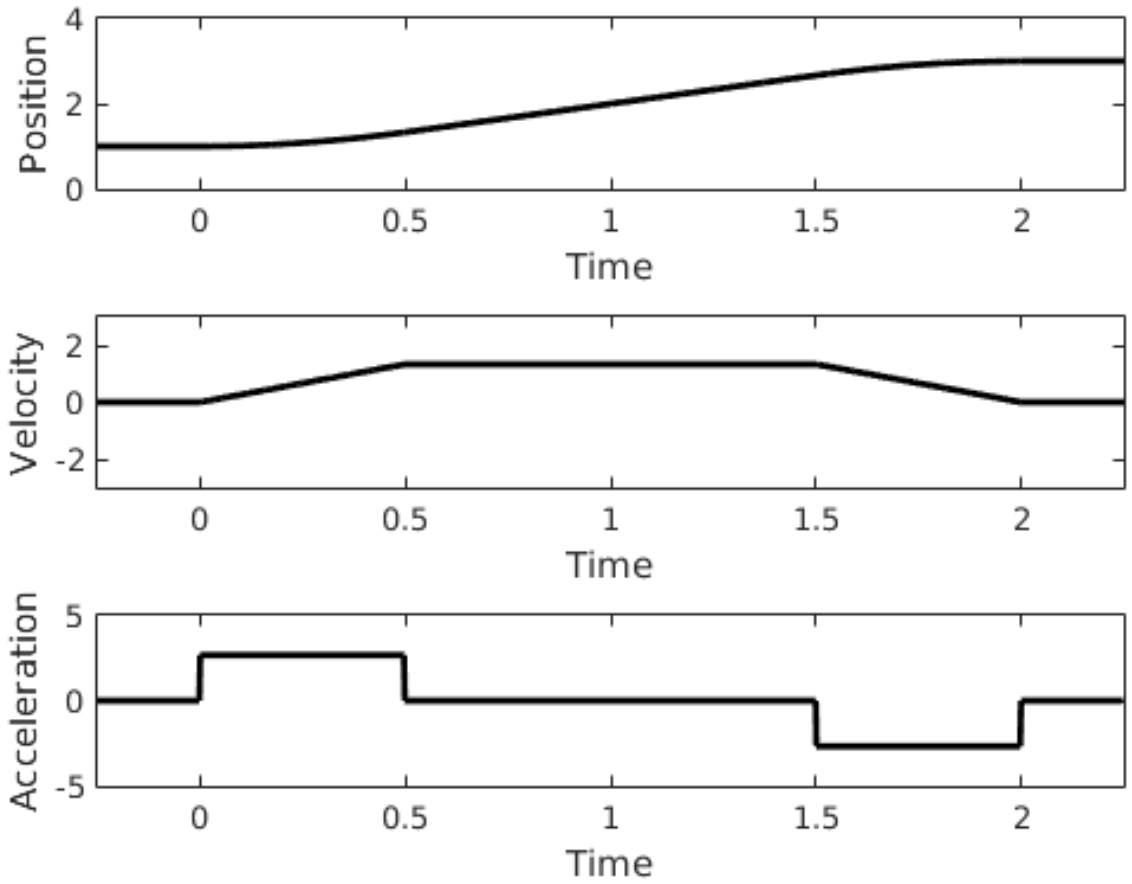

Trajectories

- Bang-bang
- Constant Velocity
- Trapezoidal
- **Spline (4th order polynomial)**

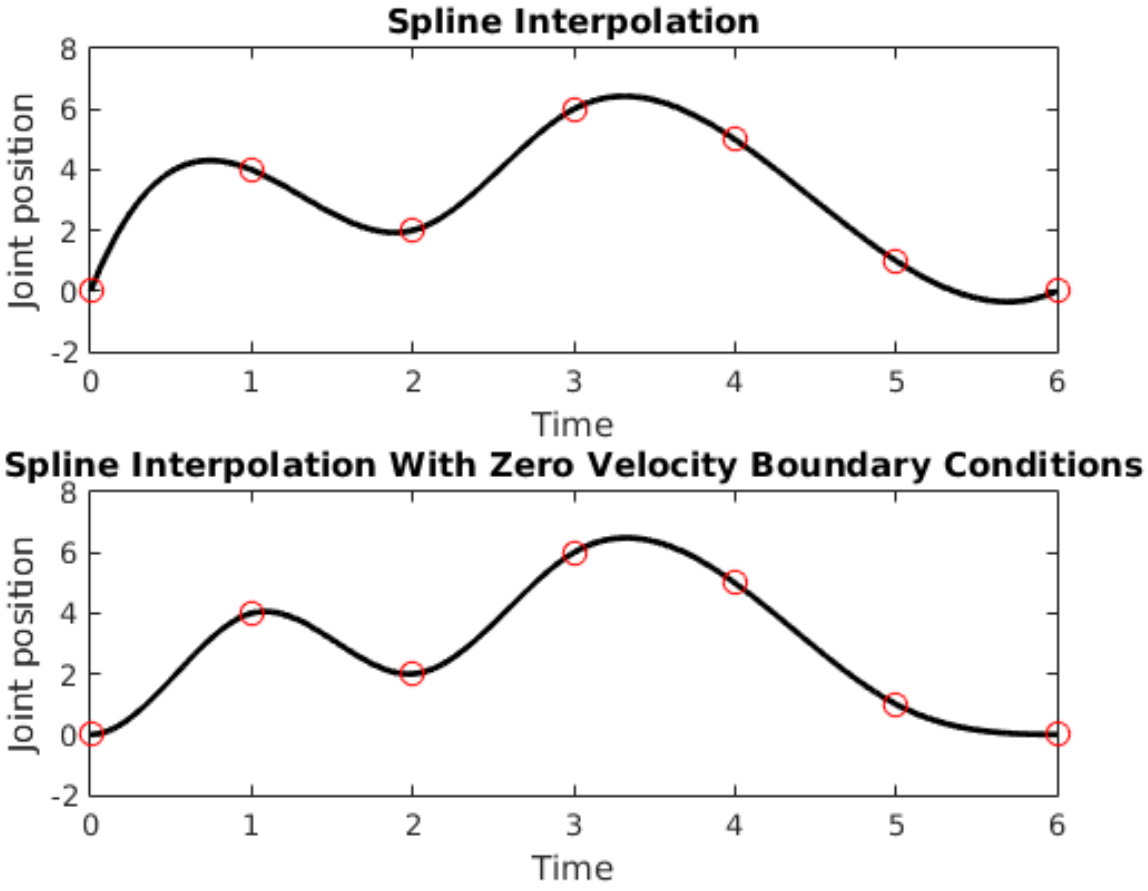

Trajectories

- Bang-bang
- Constant Velocity
- Trapezoidal
- Spline (4th)
- **Min-Jerk (5th)**
  - Human Arms
  - Robot Arms

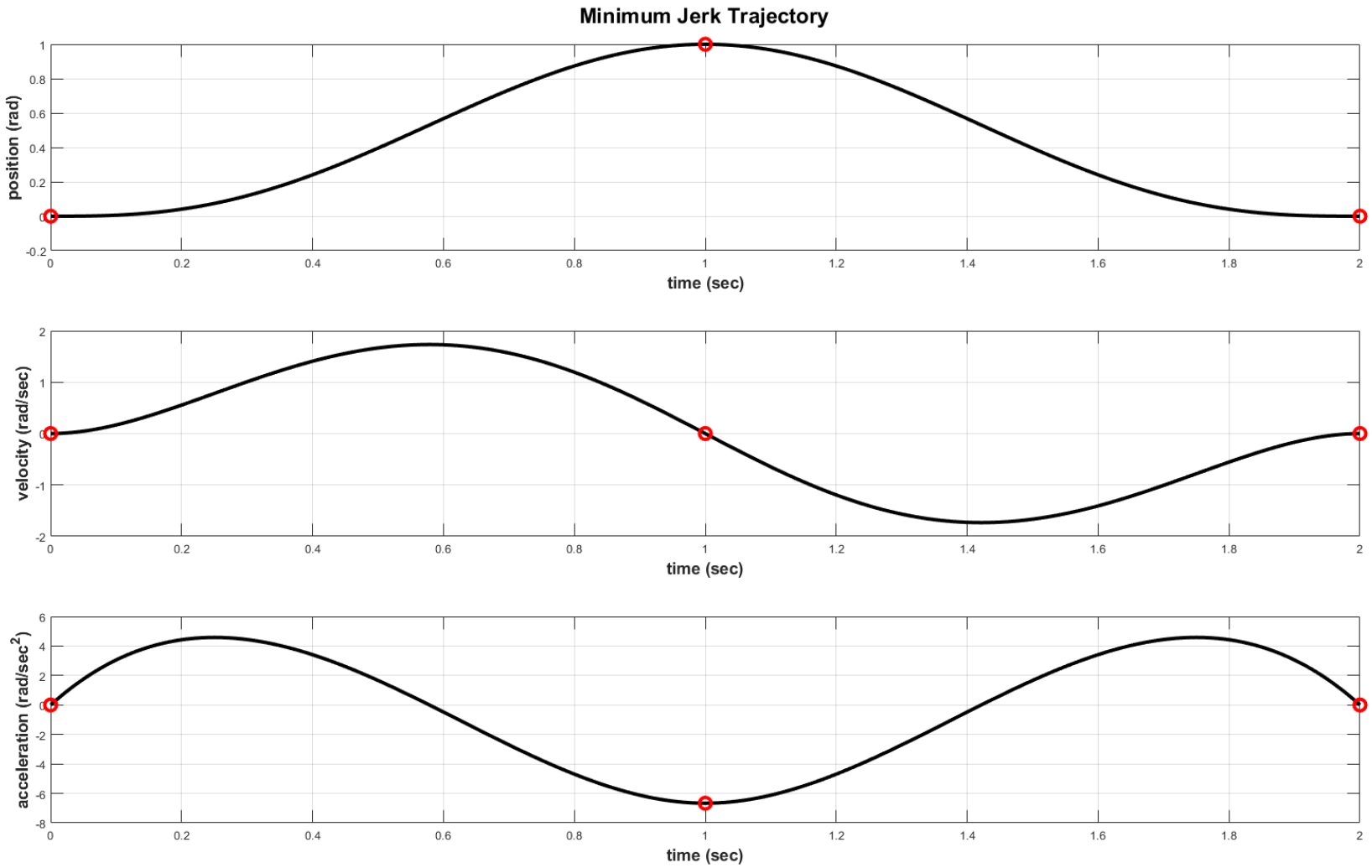

Trajectories

- Bang-bang
- Constant Velocity
- Trapezoidal
- Spline (4th)
- Min-Jerk (5th)
  - Human Arms
  - Robot Arms
- **Min-Snap (6th)**
  - Drones
- Min-Crackle (7th)
  - Ballbot
- Min-Pop (8th)

Inverse Kinematics

- xyz -> joint angles

- Analytical IK
- Numerical IK

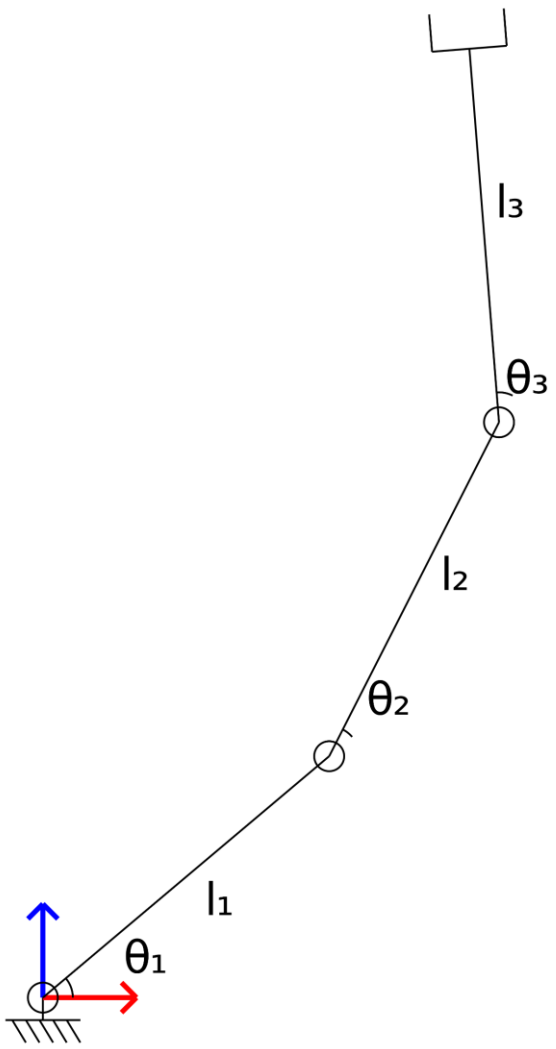

Demo

Q&A